turlens

Блок линз STB 24 (150x50°, 24 LED)

Типы светодиодов

Наименование	Угол
Блок линз STB 24 (150x50°, 24 LED)	150/50°

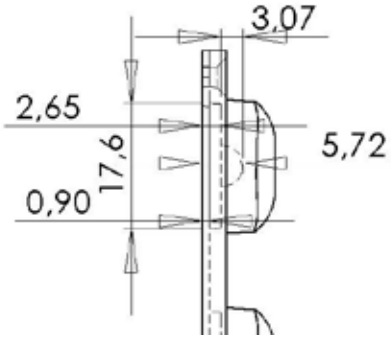

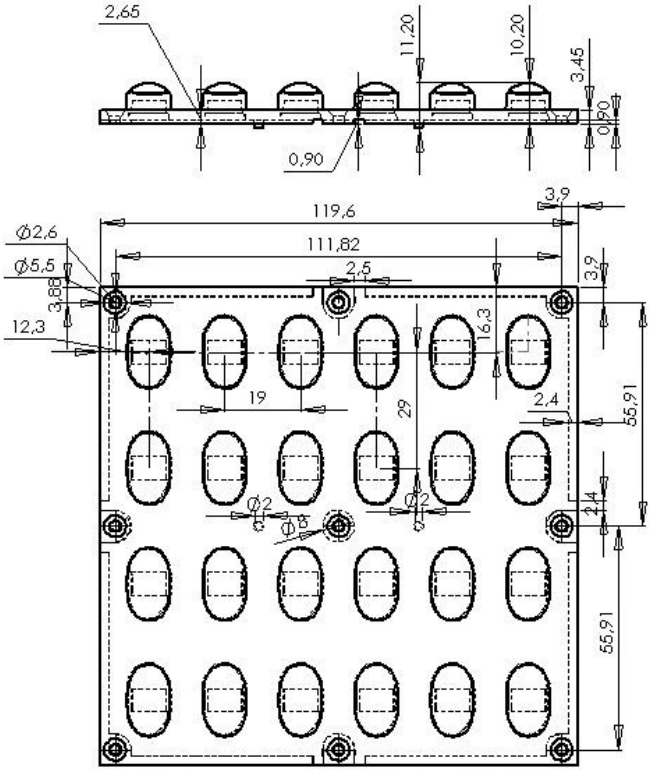

TURLENS USE : Street Lighting , Office Lighting , Home Lighting , Stage Lighting , Architectural Lighting , Down Light Lighting , Decorative Lighting

Lens Material : Optical Grade Best Available Optical Efficiency
Lens Material : with high UV & Temperature Resistance -40˚C ~ + 100˚C
Lens Material : Light Transmittance High Productivity weth 2mm Thickness

WARNING : If you Decide to use Glue only, Please Take Special Care of Correct Positioning

Габариты. Упаковка

Кол-во в коробке	72 ед
Размер коробки	25*25*16 cm
Вес коробки	4,850 Kg